Technical Bulletin 8-96

Corrosion Protection for Metal Connectors in Coastal Areas

for Structures Located in Special Flood Hazard Areas in accordance with the National Flood Insurance Program

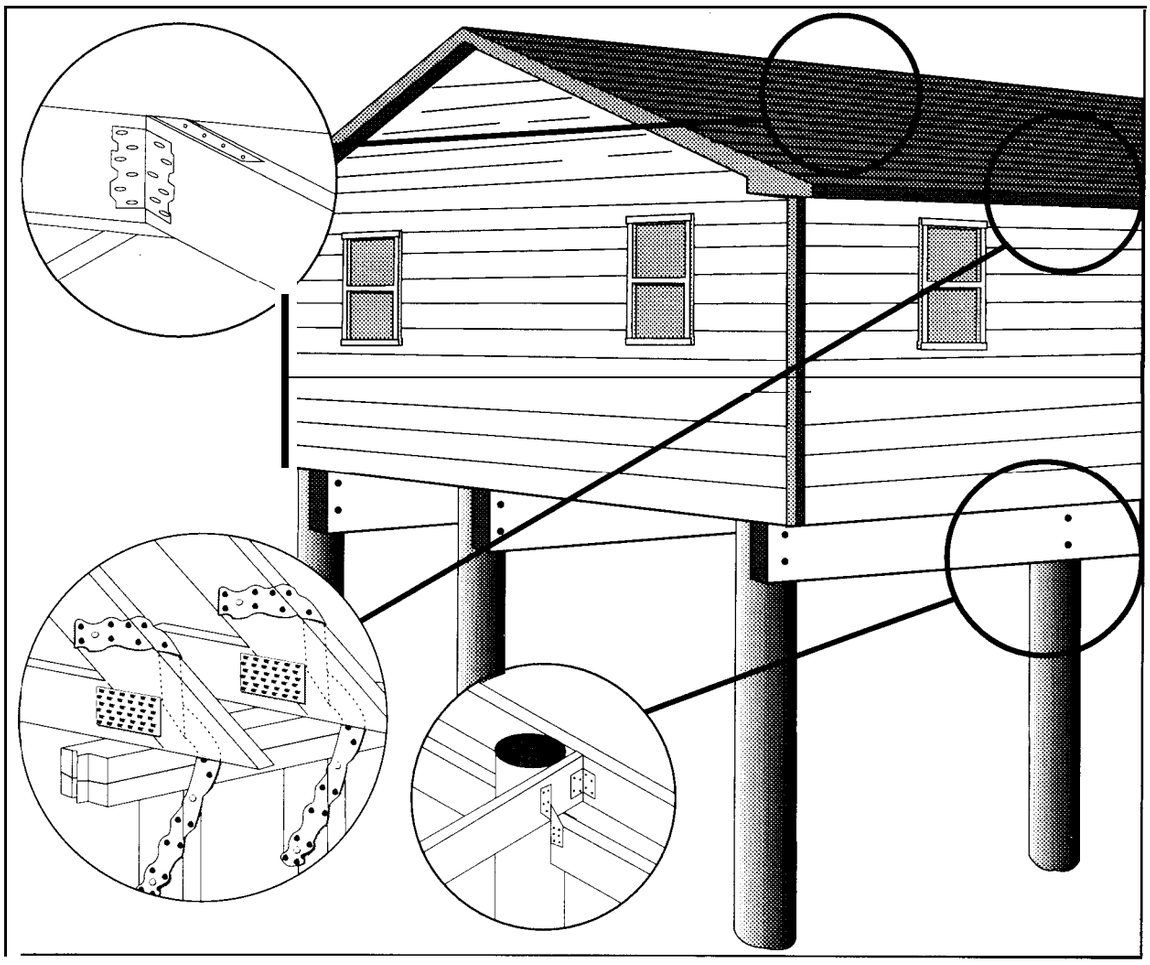

FEDERAL EMERGENCY MANAGEMENT AGENCY
MITIGATION Directorate

FIA-TB-8
(8/96)

Key Word/Subject Index:

This index allows the user to locate key words and subjects in this Technical Bulletin. The Technical Bulletin User's Guide (printed separately) provides references to key words and subjects throughout the Technical Bulletins. For definitions of selected terms, refer to the Glossary at the end of this bulletin.

Key Word/Subject	Page
Corrosion, classes of building exposure to	5
Corrosion, causes of	3
Corrosion, planning for	7
Corrosion, identifying high-risk buildings	5
Corrosion-resistant materials for sheetmetal connectors	6, 7, 9
Galvanizing	2
Salt spray from breaking waves	3

Any comments on the Technical Bulletins should be directed to:

FEMA / Mitigation Directorate
Program Development Branch
500 C Street, SW.
Washington, DC 20472

Graphic wave design on cover based on the Japanese print *The Great Wave Off Kanagawa*, by Katsushika Hokusi (1760-1849), Asiatic Collection, Museum of Fine Arts, Boston.

Key Word/Subject Index:

This index allows the user to locate key words and subjects in this Technical Bulletin. The Technical Bulletin User's Guide (printed separately) provides references to key words and subjects throughout the Technical Bulletins. For definitions of selected terms, refer to the Glossary at the end of this bulletin.

Key Word/Subject	Page
Corrosion, classes of building exposure to	5
Corrosion, causes of	3
Corrosion, planning for	7
Corrosion, identifying high-risk buildings	5
Corrosion-resistant materials for sheetmetal connectors	6, 7, 9
Galvanizing	2
Salt spray from breaking waves	3

Any comments on the Technical Bulletins should be directed to:

FEMA / Mitigation Directorate
Program Development Branch
500 C Street, SW.
Washington, DC 20472

Graphic wave design on cover based on the Japanese print *The Great Wave Off Kanagawa*, by Katsushika Hokusi (1760-1849), Asiatic Collection, Museum of Fine Arts, Boston.

Standard Metal Connectors

Common Uses

When buildings are damaged by natural hazards such as high wind, waves, flooding, and earthquakes, the structural damage usually does not start with a wood board breaking. The weak link is normally the connection between individual wooden members, and it is here that structural failure often begins. In many cases, replacing conventional nailing with a sheetmetal connector produces a connection over 10 times stronger. Hurricanes and earthquakes have demonstrated repeatedly that for most buildings, good connections often make the difference between survival and severe damage.

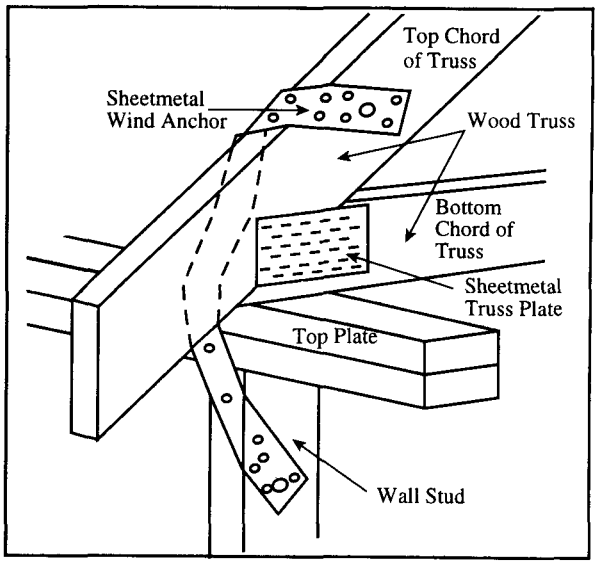

Figure 1. Wind anchor and truss plate

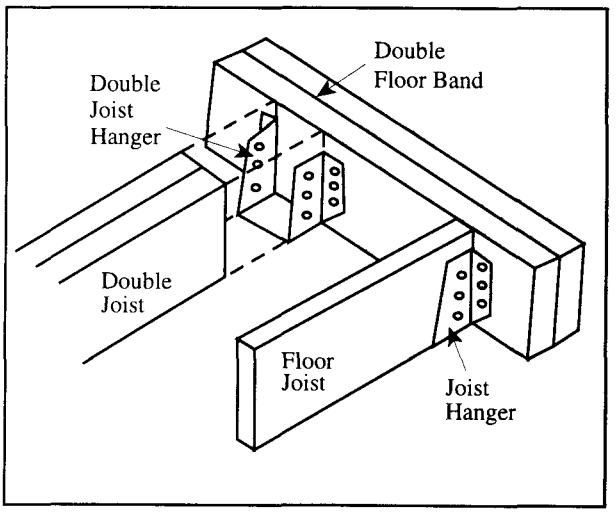

Figure 2. Single and double joist hangers

Typical metal connectors that are potentially subject to corrosion include hurricane straps and wind anchors used to connect roofs to walls (see Figure 1); truss plates that connect the separate members of premanufactured roof and floor systems (see Figure 1); joist hangers used on floor joists, beams, and rafters (see Figure 2); and various other metal straps used to connect wood components throughout the building. These include straps that attach the roof to the walls and prevent the aerodynamic lift of high winds from removing the roof or displacement caused by lateral forces during earthquakes.

Standard Materials: Galvanized Steel

Most connectors are fabricated from steel sheetmetal. In thin sheets, steel is sufficiently strong, readily workable, and relatively inexpensive, characteristics that make it well-suited for connectors. However, bare steel is subject to corrosion, or rusting, even in inland areas, and it corrodes rapidly in salt air. Most sheetmetal connectors, therefore, are galvanized for corrosion protection. Galvanizing is the process of coating steel with zinc. After careful cleaning, the steel sheet is dipped into a vat of molten zinc. The high temperature melts the surface of the steel and forms several steel/zinc alloys to tightly bond the zinc coating to the steel base metal. The coating of zinc still corrodes, but generally over 50 times more slowly than steel in the same salt air environment.

Galvanizing is particularly effective for steel because, unlike most other coatings, the zinc sacrificially protects any bare steel edges or scratches. The zinc surface near a scratch will corrode slightly faster than the zinc surrounding it and will fill small scratches with zinc

corrosion products, preventing the steel from rusting until the nearby zinc is consumed. Zinc also differs from other coatings (or paints) and most metals by corroding at a relatively steady rate in most atmospheric exposures. Therefore, doubling the thickness of the zinc coating approximately doubles the protection period.

Most connectors are fabricated after the steel sheetmetal has been galvanized. The American Society for Testing and Materials (ASTM) has established national standards for galvanizing that are accepted by the Standard (Southern Building Code Congress International), National (Building Officials & Code Administrators International), Uniform (International Conference of Building Officials), and most local building codes. Most connector manufacturers specify ASTM A-525 G 60 for the galvanized steel sheetmetal from which connectors are fabricated. ASTM A-525 is a general standard that establishes a variety of galvanizing thicknesses identified by different G numbers. The G 60 designation used for most connectors indicates a zinc coating thickness of 0.5 mil (1 mil = 0.001 inch) on each side of the steel. The numerical G designation increases or decreases proportionally with the coating thickness. For example, the coating of zinc on a G 90 connector is 1.5 times thicker than that on a G 60 connector.

Causes of Corrosion Near the Ocean

The conditions that accelerate corrosion near the coast have been studied in a few corrosion field stations and research laboratories around the world. Several of these conditions occur along most shorelines. Understanding the causes of accelerated corrosion can help identify some of the worst corrosion exposures that affect coastal buildings.

Salt Spray from Breaking Waves and Onshore Winds

Salt spray from breaking waves and onshore winds significantly accelerates the corrosion of metal connectors. The ocean salts, which are primarily sodium chloride but include other compounds, accumulate on the metal surfaces and accelerate the electrochemical reactions that cause rusting and other forms of corrosion. The combination of salt accumulation on the surface and the high humidity common to many coastal areas significantly accelerates the corrosion rate of steel and other metals commonly used for connectors or other building materials. The longer a surface remains damp during normal daily fluctuations in humidity, the higher the corrosion rate. Onshore winds carry both salt and moisture inland. Therefore, corrosion rates along shorelines with predominately onshore winds will be higher than those along shorelines with predominately offshore winds.

Distance from the Ocean

Corrosion rates vary considerably from community to community. But the amount of salt spray in the air is greatest near the breaking waves and can decline rapidly in the first 300 to 3000 feet (roughly 100 to 1000 meters) landward of the shoreline. Farther landward, corrosion is akin to that which occurs in milder, inland conditions. The width of the high-corrosion zone must be determined in each community, but oceanfront buildings will always be more severely affected than buildings farther inland.

One series of tests in North Carolina in the 1940s found that samples of iron corroded 10 times faster at 80 feet (25 meters) landward of the shoreline than samples of the same type at 800 feet (250 meters) landward of the shoreline (LaQue, 1975, see #6 in the section titled "Further

Information"). Similar results have been noted around the world. Where waves break, salt is tossed into the air and the wind tends to distribute the salt spray to inland areas.

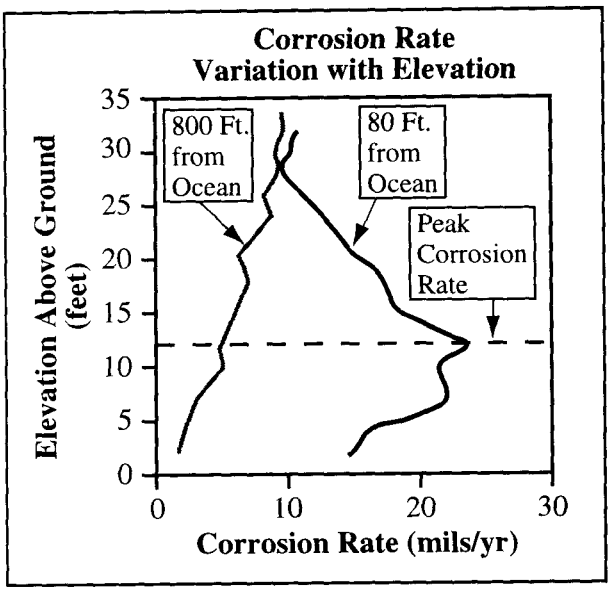

Figure 3. The variation in the corrosion rate of steel with elevation for Kure Beach, NC

Elevation

Other tests conducted in North Carolina found that corrosion reached a peak at about 12 feet (3.6 meters) above the ground (see Figure 3), approximately equal to the lowest floor elevation of an elevated building with lower level parking. Several rows of buildings farther inland, the overall corrosion rate is lower, but it is highest at an elevation above the roofs of small buildings. Figure 3 also indicates that the worst corrosion nearest the ocean was more than double the worst farther inland.

Shelter and Orientation

Bold exposures such as building exteriors are coated with large amounts of salt spray and can be expected to suffer high corrosion rates. But partially sheltered exposures, such as underneath open, piling-supported buildings or underneath decks and walkways, can sustain even worse corrosion than bold exposures. The results of other exposure tests from near the ocean in Kure Beach are shown in Figure 4 (LaQue, 1975). Steel samples were weighed, then exposed under a wooden roof. After 2 years, rust and other corrosion products were stripped from the samples, and the samples were weighed again to measure the weight loss.

The study reported that salt spray accumulations on bold exposures are rinsed periodically by rainfall (Positions 4 and 5), reducing the surface salt concentrations. Sheltered exposures receive little salt spray (Position1). Partially sheltered exposures (Positions 2 and 3) receive almost as much incoming spray as bold exposures. However, the surface concentrations remain high,

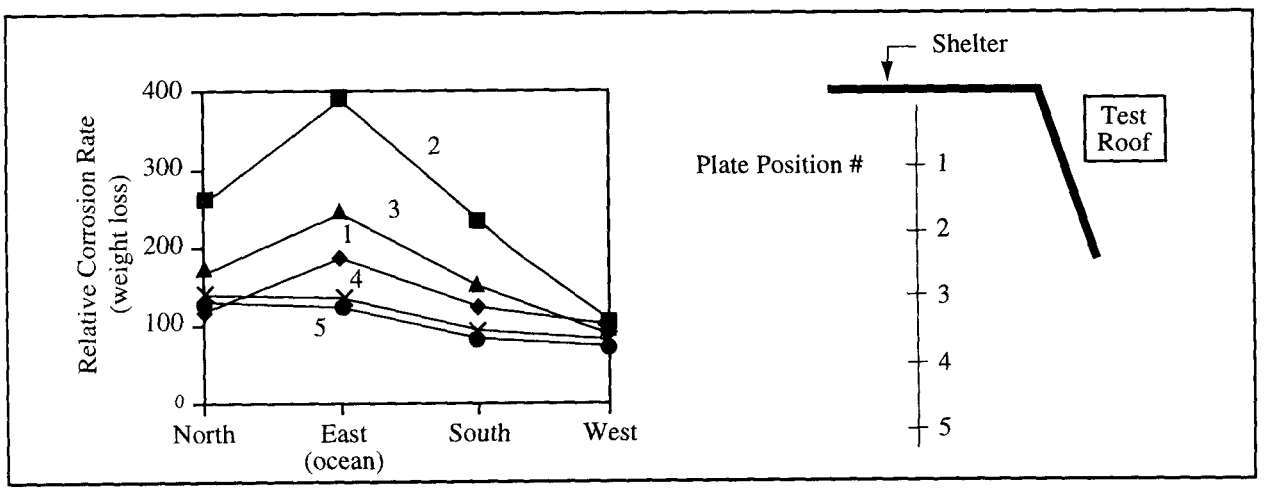

Figure 4. The effect of shelter and orientation under the test roof shown on the right

because of the shelter from cleansing rain. An additional factor is the duration of surface wetness. Accelerated corrosion occurs primarily when a certain level of surface wetness is exceeded, initiating electrochemical reactions among the metal, salts, and air. Bold exposures are more rapidly dried because they are exposed to sunlight. Drying slows the corrosion rate. Partially sheltered exposures stay damp longer and therefore corrode faster. The effect of building orientation on corrosion is also shown in Figure 4. The metals on the side of a building facing the ocean will corrode much faster than those facing away from the ocean.

Weather and Time

Weather affects the rate of corrosion in all exposures, both coastal and inland. Most chemical reactions, including corrosion rates, are affected by temperature, humidity, wind speed, and other factors. Like any weather-driven condition, the corrosion rate can vary considerably from year to year. Average conditions for factors like rainfall seldom occur. The measured rainfall is often either much higher or much lower than the average. Average years seldom occur. Likewise, the annual corrosion rate in any individual year will be significantly higher or lower than the long-term average. Therefore, annual measurements of corrosion can be very misleading unless compared to long-term averages for nearby locations.

Identifying Corrosion-Prone Buildings

In a few communities, corrosion test facilities can predict the distance from the shoreline at which corrosion will be most severe. Unfortunately, in most communities, corrosion data will not be available. Estimates of the width of the zone where corrosion-resistant materials and methods are necessary should be based on local experience. Metal connectors should be observed in older buildings at various distances from the shoreline. If oceanfront buildings are experiencing severe corrosion problems in less than 10 years, then the second or third row buildings will experience severe corrosion over a typical useful lifetime of 50 to 70 years.

Classes of Exposure for Connectors in a Building

Corrosion exposures for metal connectors in most buildings can be grouped into five classes, four of which are shown in Figure 5. The five classes are listed below in order of decreasing corrosion severity.

Partially sheltered exterior exposures. Examples include open, underhouse storage and parking areas below a piling-, column-, or post-supported building and areas underneath roof overhangs, decks, and walkways. Corrosion can significantly weaken standard sheetmetal connectors after 5 to 10 years in these exposures on oceanfront buildings.

Boldly exposed exterior exposures. Examples include exterior walls with the connector fully exposed. If the exposed connector is fully dried

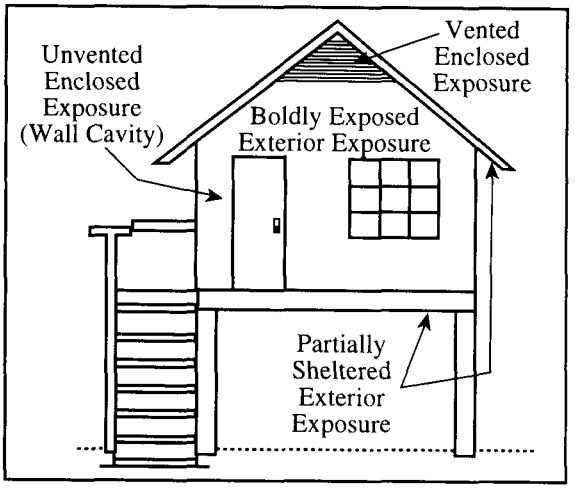

Figure 5. The locations of various classes of corrosion

between wettings by the ocean spray, the corrosion rate will be lower than that in partially sheltered exterior exposures. Otherwise, the corrosion rate can match that in partially sheltered exterior exposures.

Vented enclosed exposures. Attics, which must be vented to release excess heat and moisture, are typical examples of this type of exposure. Corrosion will vary with the location of the connector in the enclosed space. Corrosion rates for connectors near exterior vents, where outside airflow is concentrated, are often similar to those for connectors in partially sheltered exterior exposures. For connectors that are away from the vents or covered by insulation, the corrosion rate is expected to be much lower.

Unvented enclosed exposures. Examples include enclosed floor systems with solid joists or trusses. Because of the limited airflow and incoming salt spray, corrosion rates for connectors in these exposures are expected to be lower than those for connectors in the previous three exposures.

Interior living space exposures. These spaces are sealed from most salt spray, and normal heating and cooling further reduce interior humidity below the threshold needed for rapid corrosion. Connectors in these spaces should have the lowest corrosion rates.

Corrosion-Resistant Materials and Coatings

Improved corrosion resistance can be obtained by fabricating connectors from more resistant sheetmetal or by treating standard connectors after they have been fabricated. The relative improvement in corrosion resistance for different options is estimated in this section. Better materials can sometimes mean higher cost. Typical cost differences for the alternative materials are also estimated in this section.

Thicker Galvanizing

There are two methods of producing thicker galvanizing on connectors: 1) fabricating connectors from steel sheet with thicker initial galvanizing, or 2) regalvanizing standard connectors after fabrication. Galvanized sheet steel is available in a variety of coating thicknesses. Several manufacturers now market standard connectors in various designs fabricated from G 180 or G 200 grades of galvanized steel, which, compared to the standard G 60 connector, have zinc coatings that are 3 or 3.3 times thicker, respectively. Since the corrosion resistance of zinc is proportional to the thickness of the zinc, these connectors should last approximately 3 or 3.3 times longer, respectively, than standard connectors. Advertised costs for connectors with thicker galvanizing have been known to range from 1.3 to 1.7 times the cost of standard connectors.

Thicker galvanizing can also be obtained by hot-dipping standard connectors after fabrication. The manufacturer usually sends the connectors to an outside galvanizing company for dipping. Several variables can affect the thickness of the galvanizing, but the result is typically a coating of zinc four times thicker than that on a standard G 60 connector. A few types of these connectors are regularly available. Other connector designs are available by special order. The cost estimate for sheetmetal connectors hot-dipped after fabrication has been known to be roughly 1.75 times the cost of standard G 60 grade connectors.

Stainless Steel

Several connector manufacturers also produce a variety of the most commonly used connectors in stainless steel. Stainless steel is very resistant to corrosion in salt air and should last longer in a wood-frame building than most other materials, even in the most corrosive oceanfront situation. For extended lifetimes, stainless connectors must be attached with stainless steel nails when separate fasteners are needed. Stainless steel sheetmetal is a more costly raw material than the sheetmetal used to make galvanized connectors. It is also harder; therefore, stainless steel connectors are more difficult to fabricate. The cost of a stainless steel connector, including the cost of the necessary stainless steel nails, can be 6 to 15 times the cost of the same connector in G 60 grade galvanized steel.

Paint Coatings

Painting standard galvanized steel connectors can significantly improve their corrosion resistance. However many paints commonly used for buildings do not adhere well to galvanized surfaces. The Truss Plate Institute (TPI) has considered the use of truss plates in corrosive environments like coastal buildings. The TPI design specifications, which are accepted by the national model codes, recommend that one of three types of industrial paint systems be applied by brush to embedded plates after delivery of the completed truss to the job site or after truss installation (see TPI-85). The paints are specific formulations of (1) epoxy-polyamide, (2) coal-tar epoxy-polyamide, and (3) zinc chromate-vinyl butyral primer with asphaltic mastic.

The increased corrosion resistance provided by the recommended paint coatings in coastal buildings is difficult to estimate. Unlike changes in galvanizing thickness, changes in paint thickness do not proportionally change the corrosion resistance. Paint lifetimes are significantly affected by salt spray, but exposure conditions can affect paints and galvanizing differently. Surface preparation and care in application are critical for improved corrosion resistance with paints. The added cost of these coatings will vary with local labor costs. In general, other types of paints should not be assumed to significantly improve the corrosion resistance of standard connectors or truss plates. For other types of connectors, the alternatives described previously are recommended over any type of painting. However, for maintenance, zinc-rich coatings of paint may be better than nothing.

Guidance for Connector Corrosion Control

All construction materials deteriorate with time. The average useful lifetime of the structural components of a wood-frame building is approximately 70 years in the United States. Continued use of a building requires that (a) the original materials be durable enough to last the expected lifetime, (b) periodic maintenance be conducted to extend the life of original materials, or (c) the material be replaced one or more times during the lifetime of the building.

Avoid the problem

Most connectors are intended for inland uses with mild corrosion and, under normal conditions, appear to last as long as or longer than other materials in the building. Many buildings in communities near the coast are likely to experience only slightly increased corrosion rates, and standard connectors appear appropriate for those buildings. But close to the ocean, drastically higher corrosion rates can be expected. The use of standard connectors in these areas may

necessitate care in controlling the exposure. Otherwise, alternative materials should be used.

For some uses, corrosion can be partially avoided by altering the exposure of the connectors. For example, on exteriors, a connector should be fully covered if possible or otherwise protected from salt spray and moisture. Exterior siding should be designed to completely cover connectors. Applying siding in this way changes the exposure from boldly exposed to unvented enclosed. An easy, but more costly, way to protect joist hangers and truss plates in the floors of piling-supported buildings is to sheath the underside of the floor joists to reduce the exposure to salt air. Adding such sheathing transforms one of the worst exposures, partially sheltered exterior, into a less corrosive, unvented enclosed.

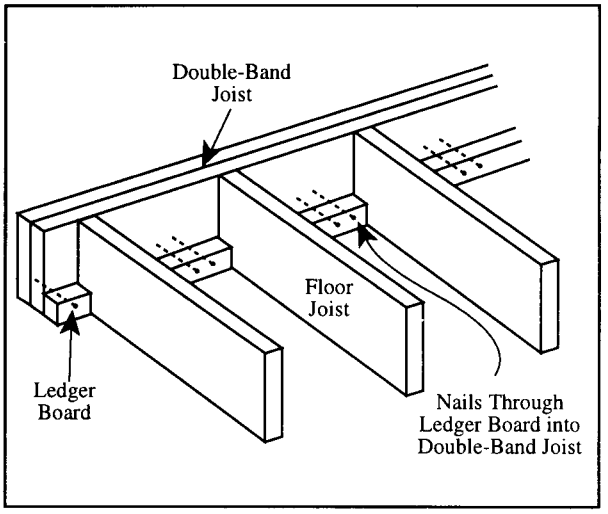

Figure 6. Traditional wooden ledger boards used in place of joist hangers in high-corrosion areas

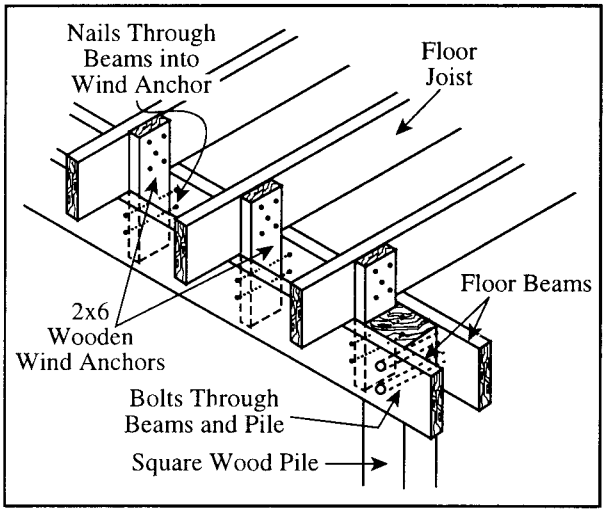

Figure 7. Wooden wind anchors used to connect floor joists to floor beams

For some connections, corrosion may be avoided by not using sheetmetal. Underneath unsheathed floors and decks, the traditional use of ledger boards avoids the need for joist hangers in the worst corrosion exposures (see Figure 6). The wooden wind anchors in Figure 7 attach piling-supported floor beams to floor joists. Commonly used on the Texas coast, these anchors proved effective during Hurricane Alicia's 90- to 100-mph winds in 1983.

Maintenance and Replacement

In some uses, connectors may be placed where they are accessible and maintainable. In milder exposures, applying a regular coat of exterior house paint may be enough to extend the life of the connector. But in severe exposures, even annual painting is unlikely to prolong the life of a connector to that of the rest of the building. In these exposures, accessible connectors may be inspected for corrosion and, if necessary, replaced. Galvanized sheetmetal connectors should be replaced as soon as partial surface rusting appears. The presence of more than thin rusty edges indicates that the zinc coating has been consumed and the sacrificial effects have been lost. Corrosion of the thin, steel sheet will occur quickly and will rapidly deteriorate the structural integrity of the connector.

When the option of periodic replacement is evaluated, the cost over the lifetime of the building should be considered. Corrosion-resistant connectors, available for a moderately higher price, can have significantly longer lifetimes than standard connectors. The cost of labor for initial installation is the same for both materials. The material and labor cost for even one replacement

is often greater than the added initial cost for corrosion-resistant materials. By using better materials initially, one can avoid the cost of two or three replacements of standard materials. In the worst exposures, where standard connectors may have to be replaced as often as every 5 years, even the use of stainless steel connectors may prove less costly over the long run.

Given the low likelihood of regular inspection by most building owners and the brief expected lifetime of standard connectors in the worst exposures, replacement is usually a poor option. Furthermore, many connectors are hidden structural components that are difficult or impossible to maintain or replace. In such cases, replacement is rarely an option and more corrosion-resistant materials should be selected. Replacement may be the only option in existing buildings where connectors have already been damaged by corrosion or were never installed. In existing buildings, adding roof connectors can significantly improve the wind resistance and is therefore worthwhile, even if some dismantling is needed to gain access.

Summary of Recommendations

For many connector applications in corrosion-prone buildings, the use of corrosion-resistant materials is the best solution for new construction. The choice of alternative connector material or coating specifications should be guided by the location of the building relative to the observed corrosion hazards in each community and by the class of exposure in the building. Recommended materials for a typical community are listed in Table 1.

Table 1 Recommendations for Corrosion–Resistant Materials and Methods*

Location Class of Exposure **	Oceanfront Buildings (300 feet or less from the shoreline)***	Intermediate Rows of Buildings in Corrosion-Prone Areas (300 to 3,000 feet from the shoreline)***	Buildings Farther Landward (Greater than 3,000 feet from the shoreline)***
Partially sheltered exteriors	1. Avoid sheetmetal connectors where possible. 2. Use stainless steel connectors. 3. Use connectors with thicker galvanizing and replace them when necessary.	Use connectors with thicker galvanizing. (Optional: stainless steel)	Use connectors with standard galvanizing. (Optional: thicker galvanizing)
Boldly exposed exteriors	1. Avoid sheetmetal connectorswhere possible. 2. Use stainless steel connectors. 3. Use connectors with thicker galvanizing and replace them when necessary.	Use connectors with thicker galvanizing. (Optional: stainless steel)	Use connectors with standard galvanizing. (Optional: thicker galvanizing)
Vented enclosures	1. Use connectors with thicker galvanizing. (Optional: stainless steel) 2. Use TPI paints on truss plates. (Optional for truss plates: thicker galvanizing, TPI paints over thicker galvanizing, or stainless steel)	1. Use connectors with thicker galvanizing near vents. 2. Use TPI paints on truss plates near vents. (Optional: thicker galvanizing for all connectors)	Use connectors with standard galvanizing. (Optional: thicker galvanizing)
Unvented enclosures	1. Use connectors with thicker galvanizing. 2. Use TPI paints on truss plates. (Optional for truss plates: thicker galvanizing)	Use connectors with standard galvanizing. (Optional: thicker galvanizing)	Use connectors with standard galvanizing. (Optional: thicker galvanizing)
Interior living space	Use connectors with standard galvanizing. (Optional: thicker galvanizing	Use connectors with standard galvanizing. (Optional: thicker galvanizing	Use connectors with standard galvanizing. (Optional: thicker galvanizing)

* Recommendations are based on the available research and are subject to change in future Technical Bulletins.
** See Figure 5 for corrosion classes.
*** Distances may vary considerably depending on local climate. The width of the corrosion hazard area relative to the ocean should be determined in each community from field observations and any existing corrosion studies.

In Table 1, building locations are categorized as oceanfront buildings, intermediate rows of buildings in corrosion-prone areas, and buildings near the coast but far enough away from the ocean that excessive corrosion is not anticipated. In most communities, connectors on oceanfront buildings can be expected to corrode at high rates. Corrosion rates should approach inland levels 300 to 3000 feet (roughly 100 to 1000 meters) landward of the ocean in most communities. The types of connector exposures in a building are listed in Table 1 in order of decreasing severity of location. Truss plate treatments are noted separately, based on TPI recommendations for corrosive environments. Recommendations in the table are in some cases based on limited research. When the severity of the exposure is unknown, selecting more corrosion-resistant materials prudent. Optional materials for superior corrosion resistance are also noted.

Technical Bulletins

This publication is one of a series of Technical Bulletins FEMA has produced to provide guidance concerning the building performance standards of the NFIP. These standards are contained in Title 44 of the U.S. Code of Federal Regulations at Section 60.3. The bulletins are intended for use primarily by State and local officials responsible for interpreting and enforcing NFIP regulations and by members of the development community, such as design professionals and builders. New bulletins, as well as updates of existing bulletins, are issued periodically, as necessary. The bulletins do not create regulations; rather they provide specific guidance for complying with the minimum requirements of existing NFIP regulations. Users of the Technical Bulletins who need additional guidance concerning NFIP regulatory requirements should contact the Mitigation Division of the appropriate FEMA regional office. The User's Guide to Technical Bulletins (FIA-TB-0) lists the bulletins issued to date and provides a key word/subject index for the entire series.

Ordering Information

Copies of the Technical Bulletins can be obtained from the appropriate FEMA regional office. Technical Bulletins can also be ordered from the FEMA publications warehouse. Use of FEMA Form 60-8 will result in a more timely delivery from the warehouse. The form can be obtained from FEMA regional offices and your state's Office of Emergency Management. Send publication requests to FEMA Publications, P.O. Box 2012, Jessup, MD 20794-2012.

Further Information

1. Atmospheric Corrosion, edited by W. H. Ailor, John Wiley & Sons, 1982.
2. "Coastal Construction Manual," FEMA, 1986, FEMA-55.
3. Corrosion Engineering, by M. G. Fontana & N. D. Greene, McGraw-Hill, 1986.
4. Corrosion Prevention by Protective Coatings, by C. G. Munger, National Association of Corrosion Engineers, 1984.
5. "Design Specification for Metal Plate Connected Wood Trusses," American National Standards Institute, ANSI/TPI 1-95, Commentary and Appendix, 1995.
6. Marine Corrosion: Causes and Prevention, by F. R. LaQue, John Wiley & Sons, 1975.

7. "Selected Specifications for Hot Dip Galvanizing," by the American Society for Testing and Materials (ASTM), 1994, available from the American Galvanizers Association.

8. "Standard Specification for General Requirements for Steel Sheet, Zinc-Coated (Galvanized) by the Hot-Dip Process," ASTM, 1987, ASTM A 525-90.

Glossary

Base Flood — The flood that has a 1-percent probability of being equaled or exceeded in any given year (also referred to as the 100-year flood).

Base Flood Elevation (BFE) — The height of the base flood, usually in feet, in relation to the National Geodetic Vertical Datum of 1929 or other datum as specified.

Coastal-High Hazard Area — An area of special flood hazard extending from offshore to the inland limit of a primary frontal dune along an open coast and any other area subject to high-velocity wave action from storms or seismic sources. These areas are identified as V zones.

Federal Emergency Management Agency (FEMA) — The independent Federal agency that, in addition to carrying out other activities, oversees the administration of the National Flood Insurance Program.

Federal Insurance Administration (FIA) — The component of FEMA directly responsible for administering the flood insurance aspects of the National Flood Insurance Program.

Flood Insurance Rate Map (FIRM) — The insurance and floodplain management map issued by FEMA that identifies, on the basis of detailed or approximate analyses, areas of 100-year flood hazard in a community.

Floodprone Area — Any land area susceptible to being inundated by floodwater from any source.

Lowest Floor — The lowest floor of the lowest enclosed area of a structure, including a basement. An unfinished or flood-resistant enclosure useable solely for parking of vehicles, building access, or storage in an area other than a basement area is not considered a building's lowest floor, as long as the enclosure is not built in such a way that it violates the non-elevation design requirements of Section 60.3 of the National Flood Insurance Program regulations.

Mitigation Directorate — The component of FEMA directly responsible for administering the floodplain management aspects of the National Flood Insurance Program and for carrying out hazard mitigation activities related to flood and other disasters.

New Construction/Structure — For floodplain management purposes, new construction means structures for which the start of construction commences on or after the effective date of a floodplain management regulation adopted by a community and includes subsequent improvements to the structure. These structures are often referred to as "Post-FIRM" structures.

Special Flood Hazard Area (SFHA) — Area delineated on a Flood Insurance Rate Map as being subject to inundation by the base flood and designated Zone A, AE, A1-A30, AR, AO, AH, V, VE, or V1-V30.

Substantial Damage — Damage of any origin sustained by a structure whereby the cost of restoring the structure to its before-damaged condition would equal or exceed 50 percent of the market value of the structure before the damage occurred.

Substantial Improvement — Any reconstruction, rehabilitation, addition, or other improvement of a structure, the cost of which equals or exceeds 50 percent of the market value of the structure before the "start of construction" of the improvement. This term includes structures that have incurred "substantial damage," regardless of the actual repair work performed.

☆U.S. GOVERNMENT PRINTING OFFICE: 1996 - 722-706/83247

TECHNICAL BULLETIN 8-96

Corrosion Protection for Metal Connectors in Coastal Areas

Introduction

An important objective of the National Flood Insurance Program (NFIP) is to protect buildings from the effects of hurricanes. The NFIP regulations include requirements concerning the resistance of buildings to flood and wind forces (as described in the following section). For a building in a Coastal High Hazard Area to comply with these requirements, many of its components must be adequately anchored. In wood-frame buildings, the necessary anchoring is usually achieved through the use of metal connectors such as joist hangers, truss plates, and hurricane straps. The need for such connectors is especially great in coastal areas, where storm-induced flooding and high winds pose significant threats. However, metal connectors are subject to corrosion when exposed to moisture and salt, both of which are prevalent in coastal areas.

This bulletin describes the causes of accelerated corrosion of metal connectors in buildings located near the ocean and some larger saltwater bays. The variation in the corrosive environments within a typical building is also described. This bulletin outlines available corrosion-resistant materials and methods of maintaining proper anchorage for the life of the building. It recommends connector materials for buildings at various distances from the ocean and for different exposure conditions within an individual building. Few local building codes and no national building codes address accelerated corrosion near the coast. This bulletin describes areas where corrosion is known to be a problem and recommends a variety of solutions.

NFIP Regulations

Section 60.3(a)(3) of the NFIP regulations states that the community shall:

> *"Review all permit applications to determine whether proposed building sites will be reasonably safe from flooding. If a proposed building site is in a flood-prone area, all new construction and substantial improvements shall (i) be designed (or modified) and adequately anchored to prevent flotation, collapse, or lateral movement of the structure..."*

And Section 60.3(e)(4) states that the community shall:

> *"Provide that new construction and substantial improvements in...(the coastal high hazard area)...are elevated on pilings and columns so that...(ii) the pile or column foundation and structure attached thereto is anchored to resist flotation, collapse and lateral movement due to the effects of wind and water loads acting simultaneously on all building components. Water loading values shall be those associated with the base flood. Wind loading values used shall be those required by applicable State or local building standards. A registered professional engineer or architect shall develop or review the structural design specifications and plans for the construction, and shall certify that the design and methods of construction to be used are in accordance with accepted standards of practice for meeting the provisions of paragraphs ... (ii) of this section."*